Wall Sensor

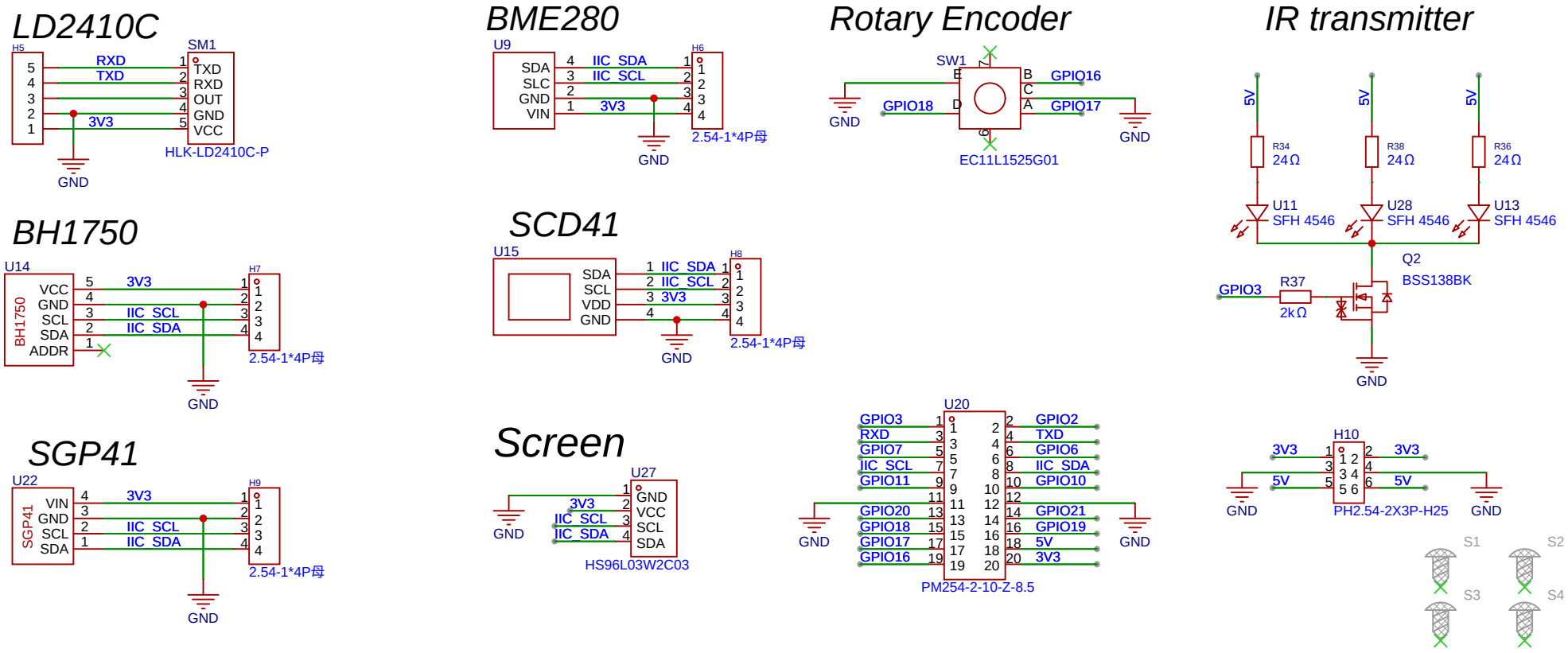

carletz	DOMIX - Domotic module for smart home & co		Create at	2026-02-19	Drawn	carletz
			Update at	2026-02-24	Reviewed	carletz
	Version	Size	Page 1 Total 1	Schematic	S2 - Wall Sensor		
	1	A4	EasyEDA	Board	S2 - WALL SENSOR	Page	Sensor